TECHNICAL DATA SHEET

BELL BOX W1 (WITH LIGHTS)

PRODUCT DETAILS

This Bell Box is used when manual signalling is performed.

The unit can be equipped with various bells and bell ringer configurations.

This unit is generally utilised for Lock Bell applications.
The housing is manufactured in stainless steel and fitted with a lock and clear lights (red and green).

Product Code:	Description:
*9820.02	S101 Bell Ringer & DM1 8-32V AC Bell
*9821.00	S102 Bell Ringer & DM1 8-32V AC Bell
*9822.00	S104 Bell Ringer & DM1 8-32V AC Bell
*9823.00	S105 Bell Ringer & DM1 8-32V AC Bell
*9824.00	S108 Bell Ringer & DM1 8-32V AC Bell
*9826.00	No. 72 Bell Pull & DM1 8-32V AC Bell
*9826.03	No. 70 Bell Pull & DB2 32V DC Bell
*9826.05	No. 72 Bell Pull & DB2 32V DC Bell
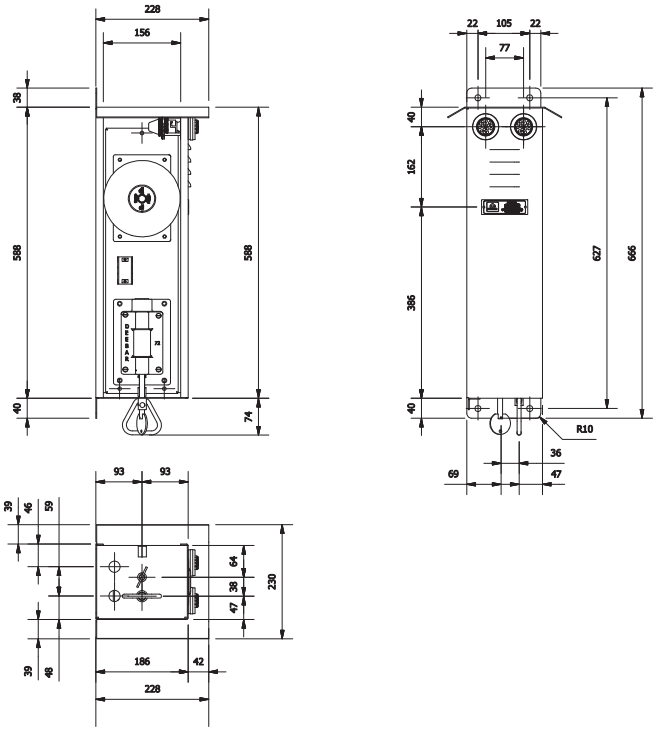
DIMENSIONAL DRAWING